REVISION HISTORY			
REV	DESCRIPTION	DATE	APPROVED

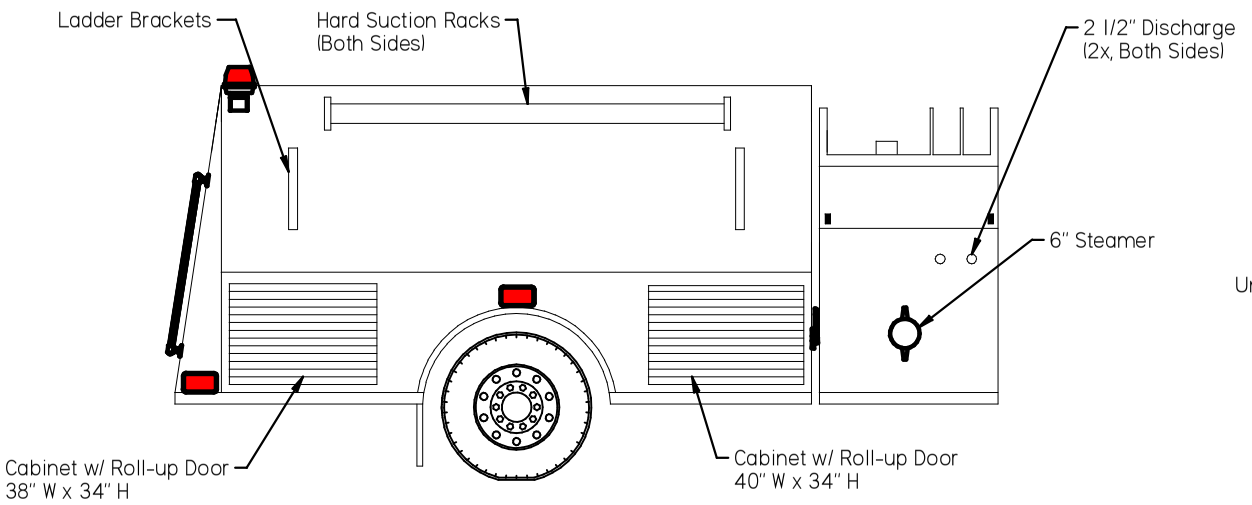

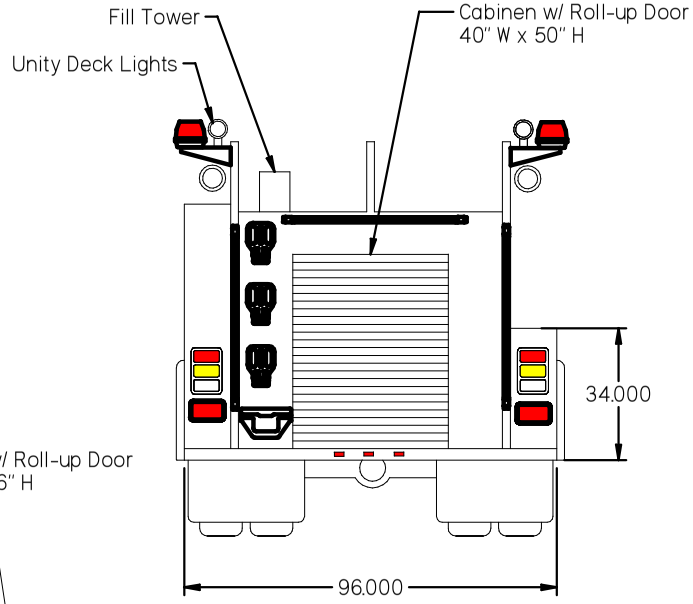

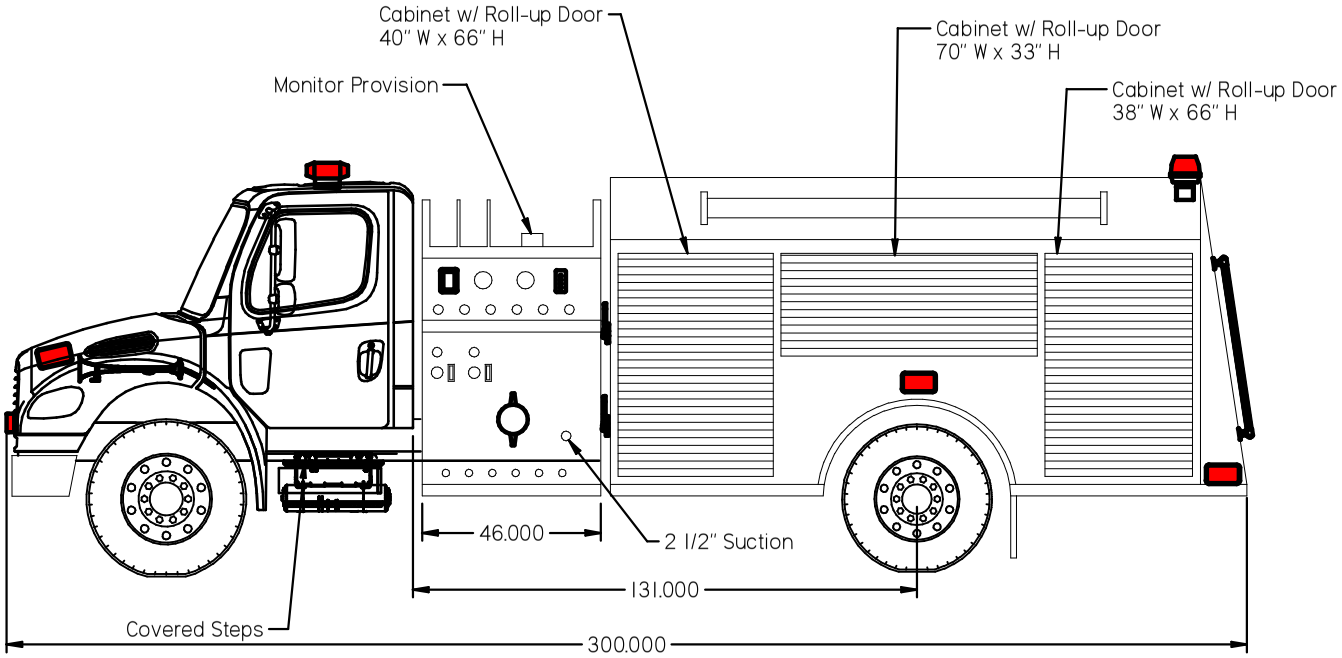

	NAME	DATE
DRAWN	B. Horsley	07/05/07
CHECKED		
ENG APPR.		
MGR APPR.		

UNLESS OTHERWISE SPECIFIED
DIMENSIONS ARE IN INCHES
ANGLES ±X.X°
2 PL. ±X.XX 3 PL. ±X.XXX

SOLID EDGE
EDS-PLM SOLUTIONS

TITLE: Burkeville F.D.

SIZE: D | DWG NO | REV

FILE NAME: burkeville-1000_gal.dft

SCALE: | WEIGHT: | SHEET 1 OF 1